DOOSAN

Mini Excavators |

# DX85R-3

STAGE IIIB COMPLIANT TIER 4 INTERIM

**Maximum power: 59.4 hp**
**Operating weight: 8.5 - 9.0 t**
**Max. bucket capacity: 0.28 m³**

# Doosan Group – Building your tomorrow today

## Be part of the great Doosan family

The Doosan Group - founded in 1896 and headquartered in Seoul, South Korea - is one of the fastest-growing companies in the world:

- With more than 37,500 employees in 38 countries, we are a major player in a variety of industries worldwide.
- A global leader in the Infrastructure Support Business (ISB), with 56 subsidiaries and 3,700 distributors worldwide.
- Dramatic growth over the past two decades, with an annual Doosan Group revenue rising from €2.4 billion in 1998 to €12.8 billion in 2016.

## Doosan Group – a top player worldwide

### Doosan Infracore

- Among the world's Top 5 manufacturers of construction equipment

### Doosan Bobcat

- A leading company in the design, manufacture, marketing, distribution and service of small equipment and attachments for construction, agriculture, and landscaping
- Leading position in the global compact equipment market
- N° 1 in North America for SSL, CTL and MEX

### Doosan Heavy Industries & Construction

- World N° 1 in desalination plant construction
- World N° 1 in heat recovery steam generator market
- World N° 1 in mould & tool steel
- World N° 3 in crankshafts

### Doosan Engineering & Construction

A pioneering leader in construction of residential and public buildings, civil works and industrial facilities.

- World N° 1 chemical process equipment products

## Doosan Infracore Construction Equipment

### Creating construction equipment for over 40 years

For over 40 years, we've been building a global production and business network to become one of the world's foremost construction equipment manufacturers.

### A solid partner, close to you

A truly global player in every respect, we have large-scale factories, sales subsidiaries and dealers all over the world.

Doosan facilities in Europe

## From machine manufacturer... to full solution provider

To ensure the highest trade-in and residual values, our parts and service support professionals maintain the performance, productivity and reliability that you expect of our products throughout their lifetime.

## Ask your dealer for a full range of services designed especially for you!

As your local specialist, your dealer ensures that you receive the maximum benefit from our integrated package. Plan ahead to ensure the success of your equipment!

Doosan approved attachments

Genuine parts

Extension of warranty

Financial solutions

Maintenance contract

Telematics

Monitoring systems

## Experience the Doosan product range!

Articulated Dump Trucks

Wheel Loaders

Wheeled Excavators

Mini Excavators

Crawler Excavators

# All-round versatility and improved fuel efficiency

## The power to raise productivity

Whatever your application you can rely on the DX85R-3 ideal working range with reduced tail swing to take on all these tasks with efficient, dependable performance that saves you time and money.

- Optimised engine, now compliant with the Stage IIIB European regulations using EGR (Exhaust Gas Recirculation) and DPF (Diesel Particulate Filter)
- Improved load sensing closed-centre hydraulic system uses the engine power more effectively, maximising pump output and offering more comfort, smoothness and accuracy regardless the load
- Increased digging power, swing torque, lifting capacity, travel speed and traction force for higher performance
- Improved fuel efficiency means you can keep costs down and reduce the environmental impact
- The dozer blade float function allows fast finishing work, simply by travelling backwards

### Boom swing

The swing bracket and the boom swing cylinder size ensure powerful and stable performance.

### Higher gradeability and work capability

Thanks to the high tractive effort and strong swing torque, the DX85R-3 offer excellent capability for working on slopes.

### RPM dial / Auto idle

Thanks to the electronic control, the optimal engine rpm can be set per workload. The auto idle function applied as standard helps fuel efficiency and reduces noise levels.

### Main control valve

The machine can be precisely controlled in single and complex operations and the front hydraulic flow matched to the work load. This contributes to great fuel economy and smooth operation.

**Reduced tail swing:** allows to operate in confined areas.

# Maximum controllability in every situation

## The highest standards of efficiency at your fingertips

Proportional auxiliary flow means that the excavator's power is matched by smooth, confident manoeuvres. Using sensitive joysticks and clear controls positioned for convenient access, you are able to work safely and confidently with minimum effort. Even the switches have been ergonomically placed on the right-hand control stand and positioned according to the frequency with which they are used. The highest standards of efficiency are just a finger's reach away.

The 5.7" colour LCD panel is located within the operator's line of sight. The monitor is user-friendly and gives access to machine settings, maintenance data and auxiliary flow control. Any abnormality is clearly displayed on the screen, allowing you to work safely and confidently with an accurate overview of all conditions.

### Proportional joystick with auxiliary thumb control

Joysticks with integrated thumb control for better metering of the boom and the bi-directional, proportional flow of auxiliary hydraulics.

### Right panel

- Dozer lever & fast speed switch
- Dozer float function and travel mode switch
- Proportional joystick

### Colour LCD monitor panel

1. Engine coolant and hydraulic oil temperatures
2. Fuel level
3. Eco symbol: changes colour when operating conditions change (idle, normal or loading)
4. Eco gauge: shows the average fuel efficiency over the last minute of operation
5. Engine speed
6. Warning symbols (12)
7. Camera (optional)

**Anti-theft function**

**Attachment:** selectable auxiliary hydraulic flow settings

**Maintenance:** diagnostics, system status and service intervals

**Monitoring**

# The ideal workspace – designed around you

## Operating in comfort

The DX85R-3 is designed to provide you with the best possible working conditions. The sophisticated ROPS cab is ISO-certified for your safety. Its spacious interior offers a fully adjustable and comfortable seat. Comfortably seated, you have easy access to several storage compartments and a clear all-round view of the worksite. Noise and vibration levels are reduced while air conditioning allows you to maximise your productivity and return on investment.

### Ergonomic operator environment

Spacious cab with ample leg room, robust ergonomic pedals, large & flat floor, cup holder, etc.

### Adjustable seat, head rest and arm rest

For more operator comfort.

### Air conditioning

Allows the operator to adjust the airflow to suit conditions.

**Storage space:** easy access to multiple storage spaces.

# More durability – less maintenance

## Dependable performance for low lifetime cost

A reinforced X-chassis provides strength, while the optimised boom shape ensures uniform load distribution for more durability. Top quality materials, the most advanced computer-aided design and endurance testing under the most demanding conditions ensure your excavator will keep on performing.
The DX85R-3 is designed for low maintenance with longer intervals resulting in more machine availability while skilled Doosan-trained technicians are available to provide extra support when needed.

**Protected hydraulics**

The hydraulic line routing is simple for a neat, compact design that enhances its durability and minimizes the pressure lost.

**Tilting cab**

To simplify access to maintenance components.

**Centralised greasing points**

To make maintenance easier, the greasing points have been centralised.

**Battery cut-off switch**

For more safety and to maintain battery capacity.

# Technical specifications

## Engine

| | DX85R-3 |
|---|---|
| Model | Yanmar 4TNV98 |
| No. of cylinders | 4 |
| Rated power at 2100 rpm | |
| (SAE J1349) | 44.3 kW (59.4 hp) |
| Max. torque at 1365 rpm | 24.6 kgf/m (241 Nm) |
| Idle (low - high) | 1050 [± 10] - 2250 [± 10] rpm |
| Piston displacement | 3319 cm³ |
| Bore × stroke | 98 mm × 110 mm |
| Starter | 12 V × 3 kW |
| Batteries - Alternator | 12 V / 100 Ah – 12 V, 80 A |
| Air filter | Double element with automatic dust evacuation |

## Fluid capacities

| | DX85R-3 |
|---|---|
| Fuel tank: | 110 l |
| Cooling system (radiator capacity): | 10 l |
| Hydraulic oil tank: | 87 l |
| Engine oil: | 10.2 l |
| Swing drive: | 1.5 l |
| Travel device: | 2 × 1.2 l |

## Environment

Noise levels comply with environmental regulations (dynamic values).

### Noise emission

| | DX85R-3 |
|---|---|
| Noise level LwA (2000/14/EC) | Guaranteed: 98 dB(A)<br>Measured: 97 dB(A) |
| Noise level LpA (ISO 6396) | 71 dB(A) |

## Undercarriage

Very robust construction throughout. All welded structures designed to limit stresses. High-quality, durable materials. Lateral chassis welded and rigidly attached to undercarriage. Track rollers lubricated for life. Idlers and sprockets fitted with floating seals. Track shoes (option) made of induction-hardened alloy with triple grouser. Heat-treated connecting pins. Hydraulic track adjuster with shock-absorbing tension mechanism.

### Number of rollers and track shoes per side

| | DX85R-3 |
|---|---|
| Upper rollers | 1 (ø 160 mm) |
| Lower rollers | 5 (ø 156 mm) |
| Number of links & shoes per side | 39 |
| Overall track length | 2825 mm |

## Buckets

| Capacity (m³) | Width (mm) | | Weight (kg) | Boom: 3380 mm | |
|---|---|---|---|---|---|
| SAE | With side cutters | W/O side cutters | | Arm: 1700 mm | Arm: 2250 mm |
| 0.28 | 813 | 707 | 232 | B | B |
| 0.20 | 646 | 540 | 199 | A | A |

A: Suitable for materials with a density less than or equal to 2000 kg/m³
B: Suitable for materials with a density less than or equal to 1600 kg/m³
For reference only.

## Hydraulic system

- The hydraulic system enables independent or combined operations
- Load sensing closed centre hydraulic with variable displacement piston pump
- Proportional joystick control
- Two travel speeds offer either increased torque or high speed
- Auto-idle
- Auto shift travel
- Control of flow in auxiliary hydraulic circuits

## Pumps

| Pump | Type | Max. flow @ 2100 rpm | Relief valve pressure |
|---|---|---|---|
| Main (load sensing) | Tandem, Axial piston | 149 l/min | 28.5 kgf/cm² |
| Pilot | Gear | 23.1 l/min | 33 kgf/cm² |

## Swing mechanism

- High-torque, axial piston motor with planetary reduction gear
- Swing bearing: single-row, shear type ball bearing with induction-hardened internal gear
- Internal gear and pinion immersed in lubricant

### Swing speed & torque

| | DX85R-3 |
|---|---|
| Maximum swing speed | 9.5 rpm |
| Maximum swing torque | 1950 kgf/m |
| Boom swing angle L/R | 70° / 55° |

## Drive

Each track is driven by an independent, high-torque axial piston motor through a planetary reduction gearbox. Two levers / foot pedals guarantee smooth travel with counter-rotation on demand.

### Speed & traction

| | DX85R-3 |
|---|---|
| Travel speed (low - high) | 2.7 - 4.7 km/h |
| Maximum traction (low - high) | 3.9 t - 6.6 t |
| Maximum gradeability | 35° / 70% |

## Hydraulic cylinders

Piston rods and cylinder bodies of high-strength steel. Shock-absorbing mechanism fitted in cylinders for shock-free operation and extended life.

| Cylinders | Quantity | Bore × rod diameter × stroke (mm) |
|---|---|---|
| One-piece boom | 1 | 115 x 70 x 775 |
| Arm | 1 | 100 x 65 x 866 |
| Bucket | 1 | 90 x 60 x 690 |
| Dozer | 2 | 100 x 60 x 149 |
| Boom swing | 1 | 110 x 60 x 738 |
| Two-piece boom | 2 | 100 x 55 x 370 |

## Digging forces (ISO)

| | | One-piece boom | | Two-piece boom |
|---|---|---|---|---|
| Boom length (mm) | | 3380 | | 1890 LB + 1880 UB |
| Arm length (mm) | | 1700 | 2250 | 1700 |
| Bucket (m³) | | 0.28 | 0.28 | 0.28 |
| Bucket | t | 6.60 | 6.60 | 6.60 |
| | kN | 64.7 | 64.7 | 64.7 |
| Arm | t | 4.39 | 3.66 | 3.66 |
| | kN | 43.0 | 35.9 | 35.8 |

# Dimensions & Working range

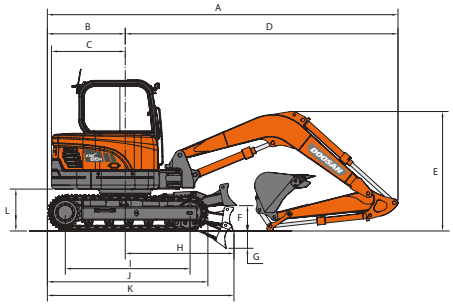


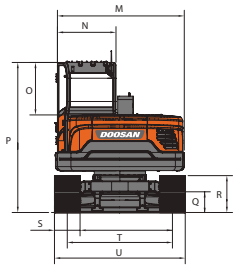


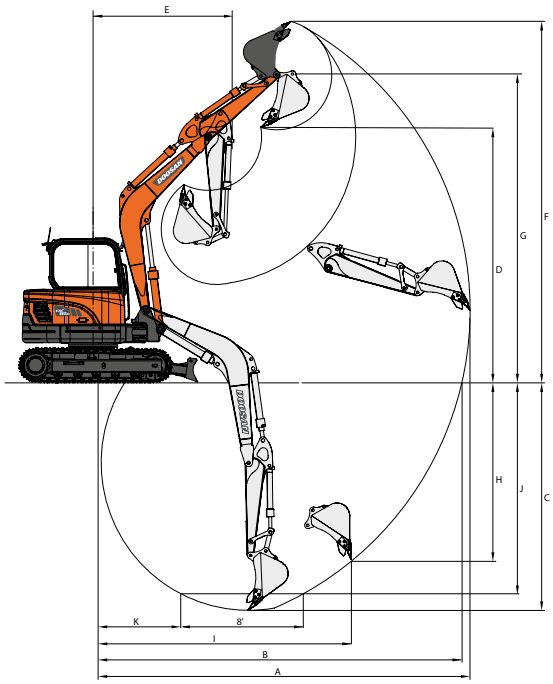


## Dimensions

| | | One-piece boom | | Two-piece boom |
|---|---|---|---|---|
| | Boom length (mm) | 3380 | | 1890 LB + 1880 UB |
| | Arm length (mm) | 1700 | 2250 | 1700 |
| A | Shipping length - mm | 6165 | 6265 | 6165 |
| B | Rear length - mm | 1370 | 1370 | 1370 |
| C | Tail swing radius - mm | 1300 | 1300 | 1300 |
| D | Front length - mm | 4785 | 4890 | 4521 |
| E | Shipping height (boom) - mm | 2085 | 2410 | 2604 |
| E | Shipping height (hose) - mm | 2150 | 2480 | 2737 |
| F | Dozer height - mm | 408 | 408 | 408 |
| G | Dozer cut below grade - mm | 304 | 304 | 304 |
| H | Center line to blade - mm | 1910 | 1910 | 1910 |
| I | Tumbler distance - mm | 2200 | 2200 | 2200 |
| J | Track length - mm | 2825 | 2825 | 2825 |
| K | Track length to dozer - mm | 3280 | 3280 | 3280 |
| L | Counterweight clearance - mm | 735 | 735 | 735 |
| M | Upperstructure width - mm | 2265 | 2265 | 2265 |
| N | Cab width - mm | 1030 | 1030 | 1030 |
| O | Cab height above bonnet - mm | 925 | 925 | 925 |
| P | Height over cab - mm | 2640 | 2640 | 2640 |
| Q | Ground clearance - mm | 362 | 362 | 362 |
| R | Track height - mm | 670 | 670 | 670 |
| S | Shoe width std. - mm | 450 | 450 | 450 |
| T | Track gauge - mm | 1850 | 1850 | 1850 |
| U | Overall width - mm | 2300 | 2300 | 2300 |
| | Boom swing distance, left - mm | 704 | 704 | 704 |
| | Boom swing distance, right - mm | 837 | 837 | 837 |

## Working range

| | | One-piece boom | | Two-piece boom |
|---|---|---|---|---|
| | Boom length (mm) | 3380 | | 1890 LB + 1880 UB |
| | Arm length (mm) | 1700 | 2250 | 1700 |
| A | Max. digging reach | 6915 | 7430 | 7180 |
| B | Max. digging reach (ground) | 6765 | 7295 | 7035 |
| C | Max. digging depth | 4175 | 4725 | 4100 |
| D | Max. loading height | 4645 | 4995 | 5365 |
| E | Min. swing radius | 2550 | 2635 | 2655 |
| F | Max. digging height | 6630 | 6980 | 7380 |
| G | Max. bucket pin height | 5655 | 6005 | 6373 |
| H | Max. vertical wall depth | 3245 | 3755 | 3550 |
| I | Max. radius vertical | 4730 | 4905 | 4530 |
| J | Max. digging depth (8´ level) | 3815 | 4420 | 3925 |
| K | Min. radius 8´ line | 1510 | 1480 | 1405 |

## Weight

| Boom (mm) | Arm (mm) | Shoes | Shoe width (mm) | Operating weight (kg) | Ground pressure (kgf/cm²) |
|---|---|---|---|---|---|
| One-piece boom (3380) | 2250 | Rubber | 450 | 8600 | 0.39 |
| | | Steel | 450 | 8630 | 0.39 |
| Two-piece boom (1890 LB + 1880 UB) | 1700 | Rubber | 450 | 9035 | 0.39 |

# Lifting capacities

## DX85R-3

### Standard configuration • Track width: 2300 mm • W/O Bucket

| Unit: 1000 kg | A / B | Chassis Frame Attachment | 2.0 m | | 3.0 m | | 4.0 m | | 5.0 m | | Max. reach | | |
|---|---|---|---|---|---|---|---|---|---|---|---|---|---|
| | | | | | | | | | | | | | A |
| One-piece boom: 3380 mm<br>Arm: 1700 mm<br>Shoe: 450 mm<br>Counterweight 1.3 t | 5.0 m | R-Dozer Up | | | | | 1.99 * | 1.85 | | | 2.01 | 1.63 | 4.29 |
| | | R-Dozer Down | | | | | 1.99 * | 1.99 * | | | 2.05 * | 2.05 * | 4.29 |
| | 4.0 m | R-Dozer Up | | | | | 1.94 * | 1.85 | 1.55 | 1.27 | 1.48 | 1.2 | 5.13 |
| | | R-Dozer Down | | | | | 1.94 * | 1.94 * | 1.94 * | 1.67 | 1.83 * | 1.59 | 5.13 |
| | 3.0 m | R-Dozer Up | | | 2.75 * | 2.75 * | 2.21 | 1.78 | 1.53 | 1.25 | 1.26 | 1.02 | 5.62 |
| | | R-Dozer Down | | | 2.75 * | 2.75 * | 2.23 * | 2.23 * | 1.99 * | 1.65 | 1.77 * | 1.36 | 5.62 |
| | 2.0 m | R-Dozer Up | | | 3.28 | 2.55 | 2.09 | 1.68 | 1.49 | 1.2 | 1.15 | 0.93 | 5.86 |
| | | R-Dozer Down | | | 4.04 * | 3.53 | 2.70 * | 2.25 | 2.17 * | 1.6 | 1.80 * | 1.25 | 5.86 |
| | 1.0 m | R-Dozer Up | | | | | 1.99 | 1.58 | 1.43 | 1.15 | 1.12 | 0.9 | 5.89 |
| | | R-Dozer Down | | | | | 3.11 * | 2.15 | 2.36 * | 1.55 | 1.92 * | 1.21 | 5.89 |
| | 0.0 m | R-Dozer Up | | | 3 | 2.3 | 1.93 | 1.52 | 1.4 | 1.12 | 1.16 | 0.93 | 5.72 |
| | | R-Dozer Down | | | 4.60 * | 3.25 | 3.27 * | 2.08 | 2.43 * | 1.51 | 2.00 * | 1.25 | 5.72 |
| | -1.0 m | R-Dozer Up | 3.97 * | 3.97 * | 3.01 | 2.3 | 1.91 | 1.51 | 1.39 | 1.11 | 1.28 | 1.03 | 5.31 |
| | | R-Dozer Down | 3.97 * | 3.97 * | 4.45 * | 3.26 | 3.12 * | 2.07 | 2.28 * | 1.51 | 2.02 * | 1.39 | 5.31 |
| | -2.0 m | R-Dozer Up | 5.38 * | 4.8 | 3.06 | 2.35 | 1.94 | 1.53 | | | 1.59 | 1.27 | 4.61 |
| | | R-Dozer Down | 5.38 * | 5.38 * | 3.63 * | 3.31 | 2.58 * | 2.1 | | | 1.97 * | 1.72 | 4.61 |
| | -3.0 m | R-Dozer Up | | | 1.94 * | 1.94 * | | | | | 1.58 * | 1.58 * | 3.34 |
| | | R-Dozer Down | | | 1.94 * | 1.94 * | | | | | 1.58 * | 1.58 * | 3.34 |

### Option 1 • One-piece boom • Track width: 2300 mm • W/O Bucket

| Unit: 1000 kg | A / B | Chassis Frame Attachment | 1.0 m | | 2.0 m | | 3.0 m | | 4.0 m | | 5.0 m | | 6.0 m | | Max. reach | | |
|---|---|---|---|---|---|---|---|---|---|---|---|---|---|---|---|---|---|
| | | | | | | | | | | | | | | | | | A |
| One-piece boom: 3380 mm<br>Arm: 2250 mm<br>Shoe: 450 mm<br>Counterweight 1.3 t | 6.0 m | R-Dozer Up | | | | | | | | | | | | | 1.86 * | 1.86 * | 3.81 |
| | | R-Dozer Down | | | | | | | | | | | | | 1.86 * | 1.86 * | 3.81 |
| | 5.0 m | R-Dozer Up | | | | | | | | | 1.54 * | 1.28 | | | 1.51 * | 1.27 | 5.02 |
| | | R-Dozer Down | | | | | | | | | 1.54 * | 1.54 * | | | 1.51 * | 1.51 * | 5.02 |
| | 4.0 m | R-Dozer Up | | | | | | | | | 1.58 | 1.29 | | | 1.23 | 1 | 5.73 |
| | | R-Dozer Down | | | | | | | | | 1.61 * | 1.61 * | | | 1.38 * | 1.33 | 5.73 |
| | 3.0 m | R-Dozer Up | | | | | | | 1.84 * | 1.82 | 1.55 | 1.26 | 1.13 | 0.92 | 1.08 | 0.87 | 6.17 |
| | | R-Dozer Down | | | | | | | 1.84 * | 1.84 * | 1.72 * | 1.67 | 1.67 * | 1.22 | 1.35 * | 1.16 | 6.17 |
| | 2.0 m | R-Dozer Up | | | | | 3.24 * | 2.67 | 2.13 | 1.71 | 1.49 | 1.21 | 1.11 | 0.89 | 1 | 0.8 | 6.38 |
| | | R-Dozer Down | | | | | 3.24 * | 3.24 * | 2.34 * | 2.29 | 1.95 * | 1.61 | 1.75 * | 1.2 | 1.37 * | 1.08 | 6.38 |
| | 1.0 m | R-Dozer Up | | | | | 3.12 | 2.4 | 2 | 1.59 | 1.43 | 1.14 | 1.08 | 0.86 | 0.97 | 0.78 | 6.41 |
| | | R-Dozer Down | | | | | 4.43 * | 3.37 | 2.85 * | 2.16 | 2.19 * | 1.54 | 1.84 * | 1.17 | 1.44 * | 1.05 | 6.41 |
| | 0.0 m | R-Dozer Up | | | | | 2.98 | 2.27 | 1.91 | 1.5 | 1.38 | 1.1 | 1.05 | 0.84 | 0.99 | 0.79 | 6.26 |
| | | R-Dozer Down | | | | | 4.86 * | 3.22 | 3.16 * | 2.07 | 2.36 * | 1.49 | 1.88 * | 1.14 | 1.59 * | 1.08 | 6.26 |
| | -1.0 m | R-Dozer Up | 2.83 * | 2.83 * | 3.40 * | 3.40 * | 2.94 | 2.24 | 1.87 | 1.46 | 1.35 | 1.07 | | | 1.07 | 0.86 | 5.90 |
| | | R-Dozer Down | 2.83 * | 2.83 * | 3.40 * | 3.40 * | 4.72 * | 3.19 | 3.19 * | 2.02 | 2.35 * | 1.46 | | | 1.80 * | 1.17 | 5.90 |
| | -2.0 m | R-Dozer Up | 4.18 * | 4.18 * | 5.24 * | 4.61 | 2.96 | 2.26 | 1.87 | 1.47 | 1.36 | 1.08 | | | 1.26 | 1.01 | 5.28 |
| | | R-Dozer Down | 4.18 * | 4.18 * | 5.24 * | 5.24 * | 4.16 * | 3.21 | 2.89 * | 2.03 | 2.06 * | 1.47 | | | 1.81 * | 1.37 | 5.28 |
| | -3.0 m | R-Dozer Up | | | 4.72 * | 4.72 * | 3.03 * | 2.33 | 1.93 | 1.52 | | | | | 1.72 * | 1.4 | 4.27 |
| | | R-Dozer Down | | | 4.72 * | 4.72 * | 3.03 * | 3.03 * | 2.03 * | 2.03 * | | | | | 1.72 * | 1.72 * | 4.27 |

### Option 2 • Two-piece boom • Track width: 2300 mm • W/O Bucket

| Unit: 1000 kg | A / B | Chassis Frame Attachment | 2.0 m | | 3.0 m | | 4.0 m | | 5.0 m | | 6.0 m | | Max. reach | | |
|---|---|---|---|---|---|---|---|---|---|---|---|---|---|---|---|
| | | | | | | | | | | | | | | | A |
| Two-piece boom:<br>1890 mm LB + 1880 mm UB<br>Arm: 1700 mm<br>Shoe: 450 mm<br>Counterweight 1.7 t | 6.0 m | R-Dozer Up | | | 3.09 * | 3.09 * | | | | | | | 3.01 * | 2.68 | 3.34 |
| | | R-Dozer Down | | | 3.09 * | 3.09 * | | | | | | | 3.01 * | 3.01 * | 3.34 |
| | 5.0 m | R-Dozer Up | | | | | 2.35 * | 2.06 | | | | | 1.89 | 1.54 | 4.71 |
| | | R-Dozer Down | | | | | 2.35 * | 2.35 * | | | | | 2.30 * | 2.02 | 4.71 |
| | 4.0 m | R-Dozer Up | | | 2.69 * | 2.69 * | 2.39 * | 2.04 | 1.73 | 1.41 | | | 1.47 | 1.2 | 5.47 |
| | | R-Dozer Down | | | 2.35 * | 2.35 * | | | | | 2.30 * | 2.02 | 1.38 * | 1.33 | 5.47 |
| | 3.0 m | R-Dozer Up | | | 3.63 * | 3.07 | 2.42 | 1.96 | 1.7 | 1.38 | | | 1.28 | 1.04 | 5.92 |
| | | R-Dozer Down | | | 3.63 * | 3.63 * | 2.67 * | 2.58 | 2.20 * | 1.82 | | | 1.94 * | 1.37 | 5.92 |
| | 2.0 m | R-Dozer Up | | | | | 2.3 | 1.84 | 1.64 | 1.33 | 1.24 | 1.01 | 1.19 | 0.96 | 6.15 |
| | | R-Dozer Down | | | | | 3.03 * | 2.46 | 2.33 * | 1.76 | 1.91 * | 1.33 | 1.85 * | 1.28 | 6.15 |
| | 1.0 m | R-Dozer Up | | | | | 2.19 | 1.74 | 1.59 | 1.28 | 1.22 | 0.99 | 1.17 | 0.94 | 6.18 |
| | | R-Dozer Down | | | | | 3.24 * | 2.35 | 2.41 * | 1.7 | 1.88 * | 1.31 | 1.76 * | 1.26 | 6.18 |
| | 0.0 m | R-Dozer Up | | | | | 2.13 | 1.69 | 1.55 | 1.24 | 1.21 | 0.98 | 1.21 | 0.97 | 6.02 |
| | | R-Dozer Down | | | | | 3.14 * | 2.29 | 2.34 * | 1.67 | 1.67 * | 1.3 | 1.65 * | 1.3 | 6.02 |
| | -1.0 m | R-Dozer Up | 2.46 * | 2.46 * | 3.36 | 2.57 | 2.13 | 1.68 | 1.55 | 1.24 | | | 1.33 | 1.07 | 5.64 |
| | | R-Dozer Down | 2.46 * | 2.46 * | 3.57 * | 3.57 * | 2.74 * | 2.29 | 2.03 * | 1.67 | | | 1.47 * | 1.43 | 5.64 |
| | -2.0 m | R-Dozer Up | | | 2.51 * | 2.51 * | 1.99 * | 1.71 | | | | | 1.15 * | 1.15 * | 4.99 |
| | | R-Dozer Down | | | 2.51 * | 2.51 * | 1.99 * | 1.99 * | | | | | 1.15 * | 1.15 * | 4.99 |

1. Lifting capacities are in compliance with ISO 10567:2007(E).
2. The load point is at the end of the arm.
3. * = The nominal loads are based on hydraulic capacity.
4. The nominal loads shown do not exceed 75% of tipping loads or 87% of hydraulic lifting capacity.
5. For lifting capacity with bucket, simply subtract the actual weight of the bucket from the values.
6. The configurations indicated do not necessarily reflect the standard equipment of the machine.

: Rating over front.
: Rating over side or 360°.

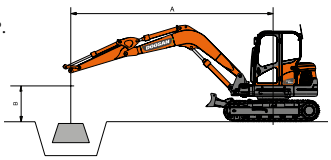

# Standard and optional equipment

## Engine

| | |
|---|---|
| Yanmar Diesel engine, Common Rail direct injection, EU Stage IIIB compliant, EGR | ● |
| Diesel particulate filter (DPF) | ● |
| Auto-idle | ● |

## Hydraulic system

| | |
|---|---|
| Boom and arm flow regeneration | ● |
| Spare ports (valve) | ● |
| Breaker piping | ● |
| Cylinder cushioning & contamination seals | ● |
| Control of auxiliary hydraulic flow and settings from the display panel, 1st auxiliary 2 way & 2nd auxiliary 2 way | ● |

## Cab & Interior

| | |
|---|---|
| Roll Over Protective Structure (ROPS) | ● |
| Pressurised, sound-insulated cab | ● |
| Adjustable seat with adjustable headrest and armrest | ● |
| Air conditioning | ● |
| Pull-up type front window and removable lower front window | ● |
| Sliding right windows with lock | ● |
| Ceiling light | ● |
| Intermittent upper windshield wiper | ● |
| Multiple storage compartments | ● |
| Flat, spacious, easy-to-clean floor | ● |
| Cup holder | ● |
| Anti-theft protection | ● |
| 5.7“ (14.5 cm) LCD colour monitor panel | ● |
| Engine speed (RPM) control dial | ● |
| Hydrostatic 2-speed travel system with manual or automatic shift | ● |
| Radio-ready | ● |
| 12 V power socket | ● |
| Serial communication port for laptop PC interface | ● |
| Adjustable PPC for arm, boom, bucket and swing, with sliding proportional control for attachments and auxiliary hydraulic buttons | ● |
| Travel pedals and hand levers | ● |
| Master key | ● |
| Diesel particulate filter regeneration switch | ● |
| MP3/USB radio with CD player (kit) | ○ |

## Safety

| | |
|---|---|
| Boom and arm cylinder safety valves | ● |
| Overload warning device | ● |
| Rotating beacon | ● |
| Hydraulic safety lock lever | ● |
| Safety glass | ● |
| Hammer for emergency escape | ● |
| Right and left rearview mirrors | ● |
| Emergency engine stop switch | ● |
| Engine overheat and restart prevention system | ● |
| Parking brake and cab swing lock automatic | ● |
| Reinforced cast steel pivot points | ● |
| Battery cut-off switch | ● |
| Halogen work light (1 on cab top) | ● |
| Lockable fuel cap | ● |
| FOGS cab - top and front cab guards (ISO 10262) (kit) | ○ |
| Rear camera | ○ |
| Front window upper and lower guards | ○ |

## Other

| | |
|---|---|
| Mono boom: 3380 mm – arm: 1700 mm – Counterweight: 1322 kg | ● |
| Fuel filler pump | ● |
| Double element air cleaner | ● |
| Engine hood with gas spring | ● |
| Self-diagnostic function | ● |
| Battery (12 V, 100 Ah), alternator (12 V, 80 A) | ● |
| Electric horn | ● |
| Remote greasing for swing circle and workgroup pivot points | ● |
| Guards for boom lights | ● |
| Long arm: 2250 mm | ○ |
| Two-piece boom (1890 mm + 1880 mm) with 1.7 m arm and counterweight 1720 kg | ○ |
| Hydraulic piping for crusher, quick coupler, clamshell, tilting and rotating buckets | ○ |

## Undercarriage

| | |
|---|---|
| Fixed undercarriage | ● |
| Hydraulic track adjuster | ● |
| Greased and sealed track links | ● |
| Rubber tracks 450 mm | ● |
| Dozer blade (width: 2300 mm & height: 408 mm) | ● |
| Dozer double check valve (kit) | ○ |
| Steel tracks 450 mm | ○ |
| 3rd auxiliary clamshell | ○ |

Standard: ●
Optional: ○

Some of these options may be standard in some markets. Some of these options may not be available for certain markets. Please check with your local DOOSAN dealer for more information about availability or to adapt your machine to your application needs.

11

*Now showing at: products.doosanequipment.eu*

*www.doosanequipment.eu*

DOOSAN

©2019 DOOSAN D 4405521-EN (01-19)

Doosan Infracore Europe B.V., IBC - Pobřežní 620/3, 186 00 Praha 8-Karlín, Czech Republic

Specifications and design are subject to change without notice. Pictures of Doosan products may show other than standard equipment.